674FK040-20BA

CHANNEL 400x4000 CENTER OUTLET

-Floor: concrete, tiled and resin
-Liquid membrane
-Outlet: Ø160mm, vertical
-Stainless steel: AISI304/EN1.4301

Product Codes

UPC/EAN: 5705499131451
VVS Number:
RSK Number:
NRF Number:
LVI Number:

Specification

Brand Name: BLÜCHER
Floor: Concrete/tiled/resin
Material: AISI 304
Material (EN): EN 1.4301
Membrane Type: Liquid membrane
Minimum Height (mm): 170
Outlet Box: No
Outlet Diameter (mm): 160
Outlet Direction: Vertical
Outlet Placement: Center
Series: Channel-Liquid membrane
Size: 400x4000
Weight (kg): 48,14

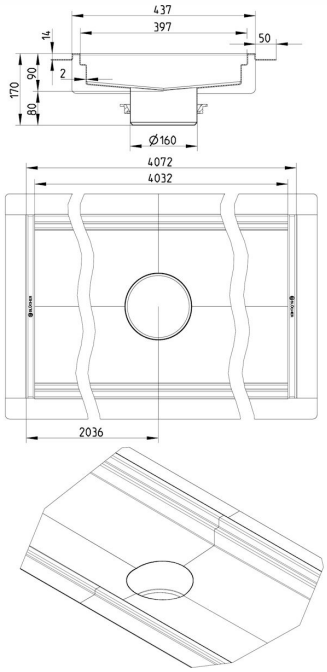

A WATTS Brand
© 2019 BLÜCHER