676CC020-10CF

HYGIENICPRO CHANNEL 150x2000 CENTER OUTLET

-Low model. With outlet box
-Floor: concrete, tiled and resin
-No membrane
-Outlet: Ø110mm, vertical
-Stainless steel: AISI304/EN1.4301

Product Codes

UPC/EAN: 5705499136692
VVS Number: 221801020
RSK Number:
NRF Number:
LVI Number: 3305663

Specification

Brand Name: BLÜCHER
Floor: Concrete/tiled/resin
Material: AISI 304
Material (EN): EN 1.4301
Membrane Type: No membrane
Minimum Height (mm): 378
Outlet Box: Yes
Outlet Diameter (mm): 110
Outlet Direction: Vertical
Outlet Placement: Center
Series: Channel-No membrane
Size: 150x2000
Type: Channels
Weight (kg): 19,85

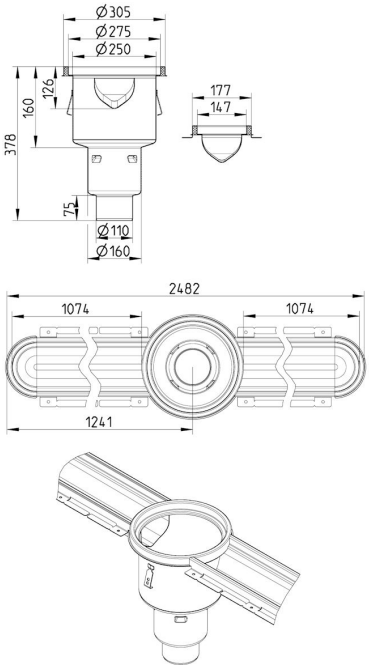

© 2019 BLÜCHER