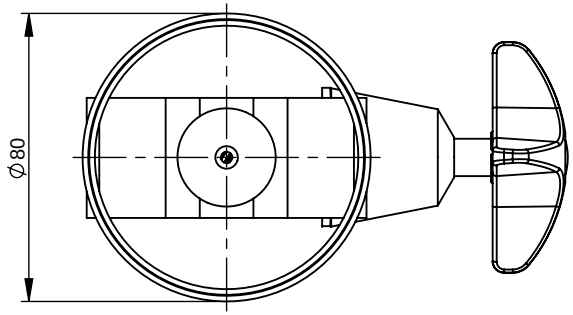

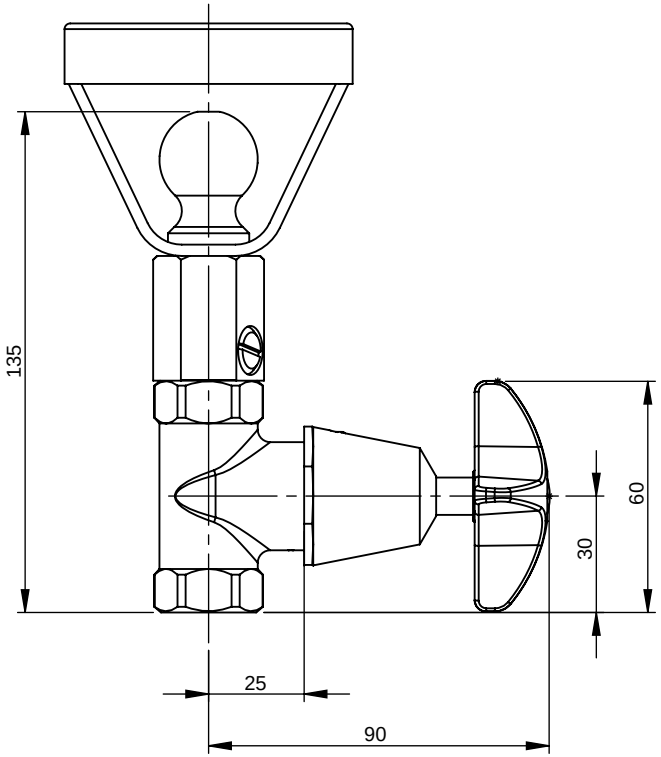

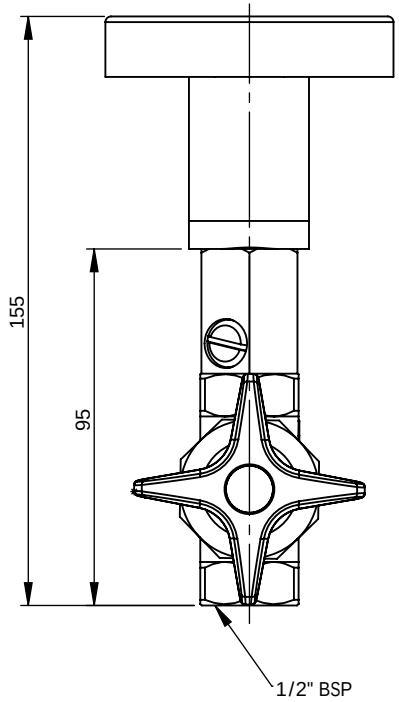

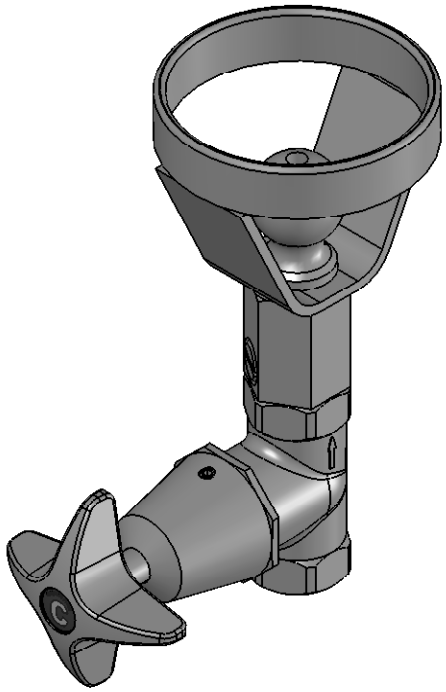

REV	DATE	CN	AMMENDMENTS	APP
A	06/09/06		FIRST ISSUE	
B	11/10/06		REDRAWN & REASSEMBLE - BY KN	

GENERAL NOTES:
REMOVE ALL BURRS AND SHARP EDGES UNLESS OTHERWISE STATED
DIMENSIONS ARE IN mm's
TOLERANCE EXCEPT WHERE STATED:

NO DECIMAL POINT	± 0.2
ONE DECIMAL PLACE	± 0.1
TWO DECIMAL PLACES	± 0.05
ANGLES	± 1

ENWARE RESERVES THE RIGHT TO AMEND PRODUCT SPECIFICATIONS AND DESIGNS WITHOUT NOTICE.

DRAWN	PK	9 Endeavour Rd, Caringbah, NSW, 2229 Ph. 61-2-9525-9511 Fax. 61-2-9524-8421
CHECKED	PK	
APPROVED		

ENWARE AUSTRALIA PTY LIMITED

TITLE: T45 UPRIGHT FOUNTAIN W/T63 GUARD

Scale: Not To Scale

Scale: Not To Scale

MATERIAL:

FINISH:

This drawing is the Copyright of Enware Australia Pty Ltd and may not be reproduced in full or part without the written consent of Enware Australia Pty Ltd

DWG NO. BUB243

SHEET 1 OF 2